0 601 936 503

Stand ~~02-06~~
Issue 05-11-22

Fig./Abb. 1

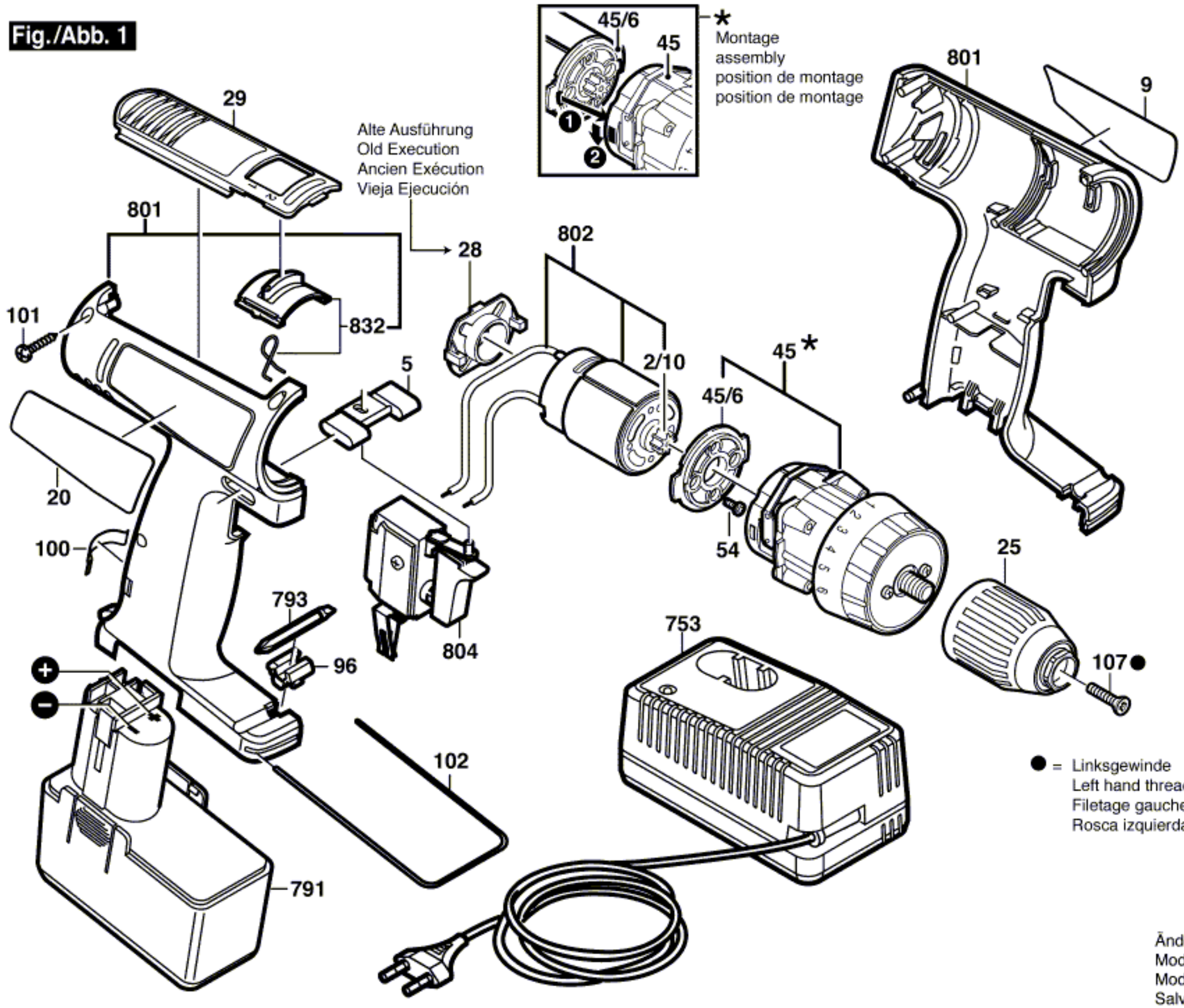

Änderungen vorbehalten
Modifications reserved
Modifications reservees
Salvo modificaciones