0 601 121 139; 160
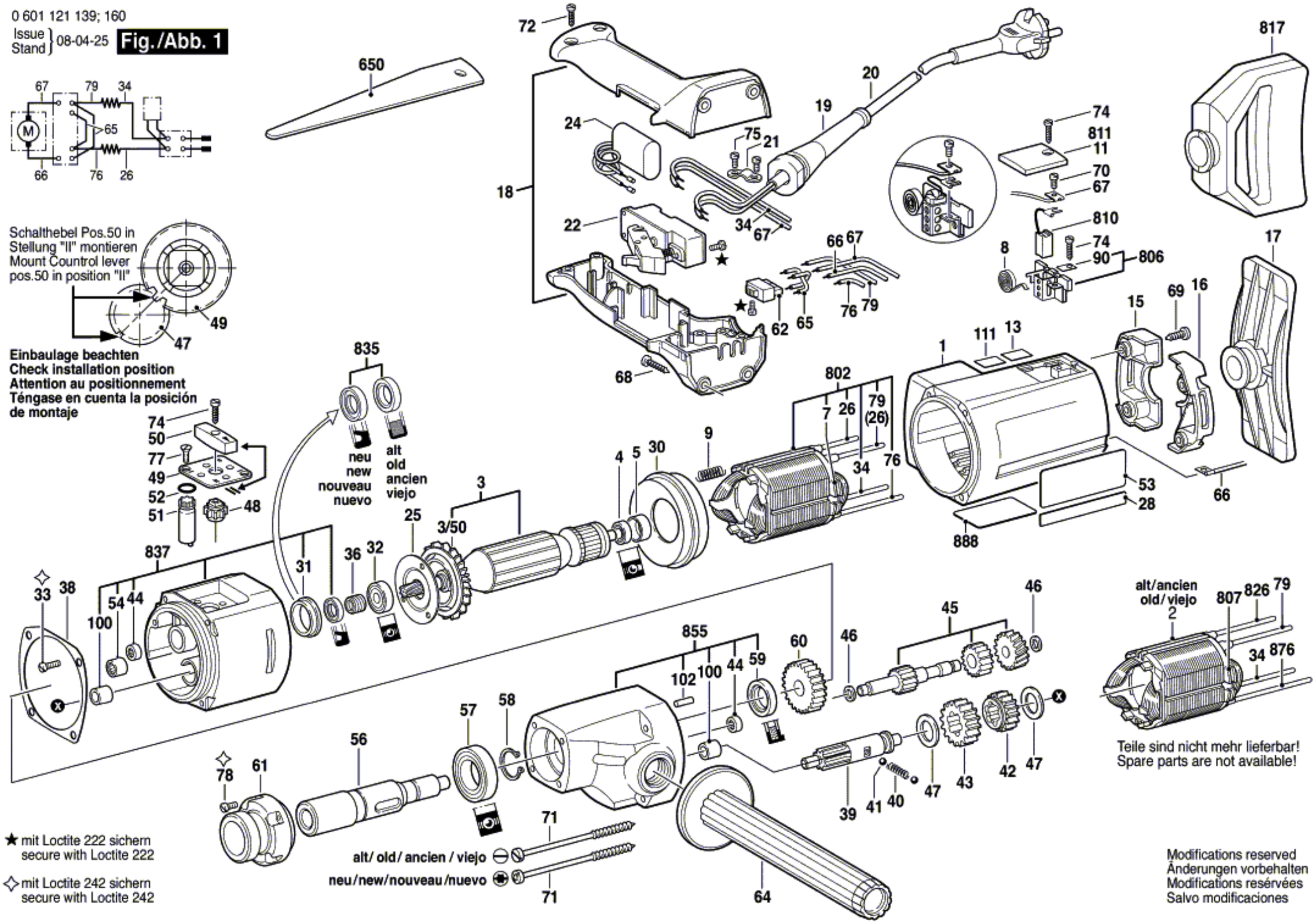
Issue / Stand } 08-04-25 **Fig./Abb. 1**