HITACHI

LIST NO. E878

ELECTRIC TOOL PARTS LIST

■ CHARGER

Model UC 12YD

1994 • 5 • 30
(E1)

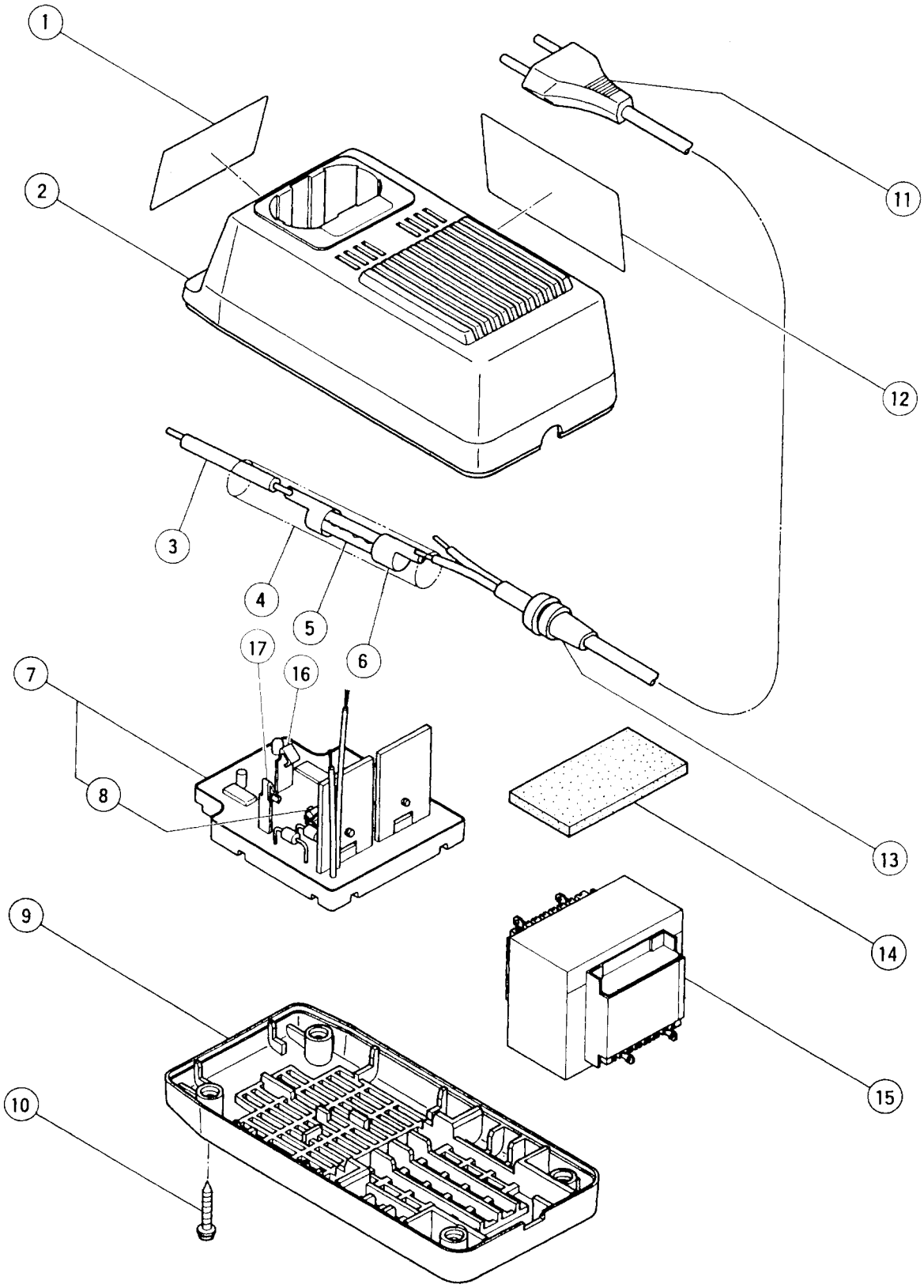

PARTS

UC 12YD

	ITEM NO.	CODE NO.	DESCRIPTION	NO. USED	REMARKS	
*	1		NAME PLATE	1		
	2	309-440	CASE (A)	1		
*	3	302-084	FUSE HOLDER	1	(W/WIRE) FOR SWE,FIN	
*	4		TUBE (I.D.7X0.5TX50)	1	FOR SWE,FIN	
*	5	302-083	FUSE	1	FOR SWE,FIN	
*	6	302-082	FUSE HOLDER	1	FOR SWE,FIN	
	7	309-441	PRINTED CIRCUIT BOARD ASS'Y	1	INCLUD.8	
	8	991-807	FUSE (5A)	1		
	9		CASE (B)	1	REPLACE THE WHOLE UNIT WITH NEW ONE	
	10	300-036	TAPPING SCREW (W/FLANGE) D3X20	4		
*	11	980-642Z	CORD	1		
*	11	309-169	CORD	1	FOR NZL	
*	11	307-216	CORD	1	FOR GBR	
*	12		CAUTION PLATE	1		
*	13	991-167	CORD ARMOR	1	FOR CORD	
	14	982-490	CUSHION (A)	1		
*	15	309-446	TRANSFORMER 230V	1		
*	15	309-623	TRANSFORMER 240V	1		
	16	306-880	TERMINAL (A)	2		
	17	306-881	TERMINAL (B)	2		

STANDARD ACCESSORIES

	ITEM NO.	CODE NO.	DESCRIPTION	NO. USED	REMARKS	
*	601	301-832	ADAPTER (W/ENGLISH CAUTION PLATE)	1		
*	601	301-833	ADAPTER (W/GERMAN CAUTION PLATE)	1	FOR FRG,AUT,SUI,BEL	
*	601	301-834	ADAPTER (W/FRENCH CAUTION PLATE)	1	FOR FRA	
*	601	301-835	ADAPTER (W/HOLLAND CAUTION PLATE)	1	FOR HOL	
*	601	302-079	ADAPTER (W/FINLAND CAUTION PLATE)	1	FOR FIN	
*	601	302-080	ADAPTER (W/NORWAY CAUTION PLATE)	1	FOR NOR	

*: ALTERNATIVE PARTS