HITACHI

LIST NO. E830

ELECTRIC TOOL PARTS LIST

■ CHARGER

Model UC 12Y

1995 • 1 • 9
(E3)

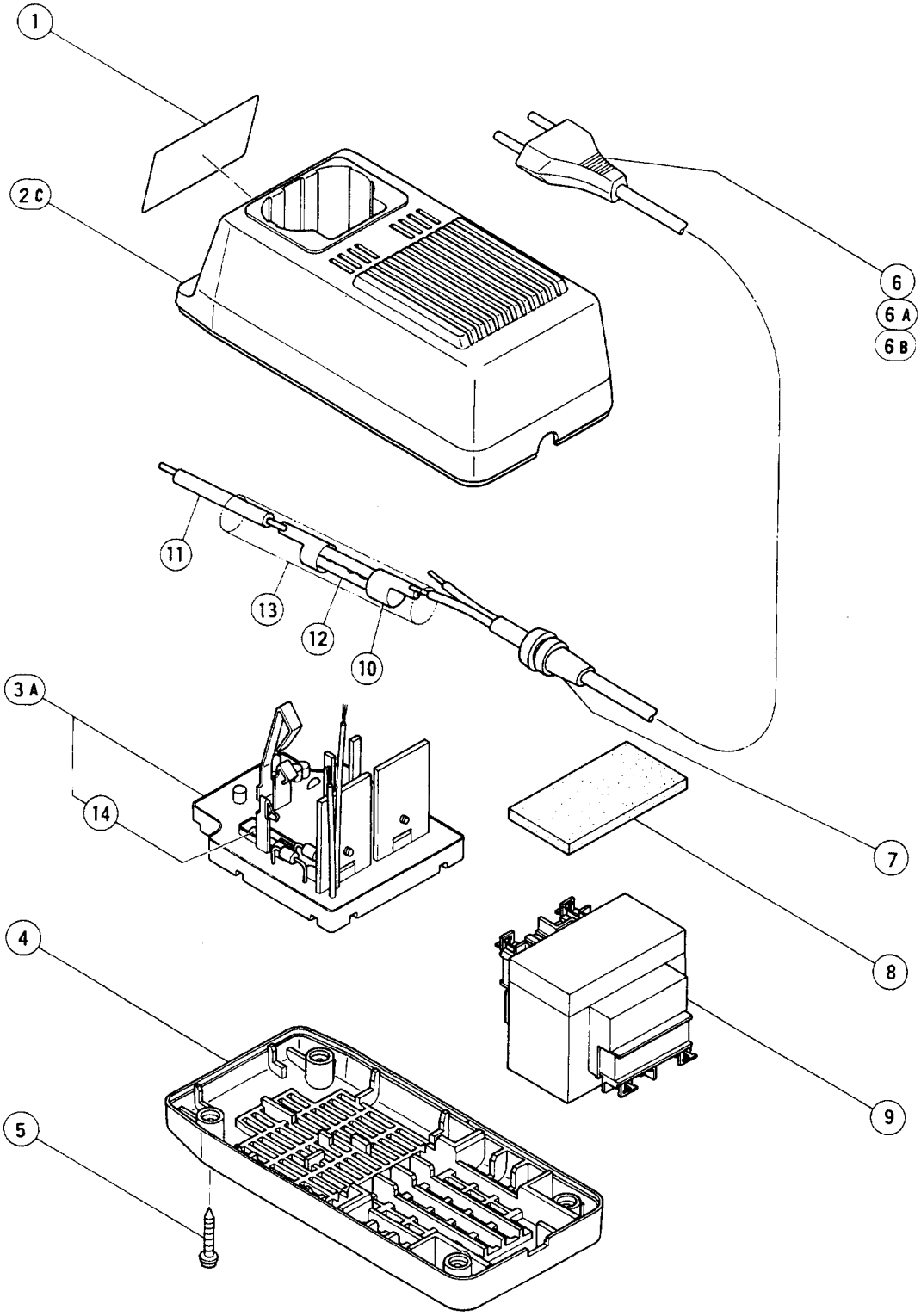

PARTS

UC 12Y

	ITEM NO.	CODE NO.	DESCRIPTION	NO. USED	REMARKS	
	1		NAME PLATE	1		
*	2C	300-027	CASE (A)	1		
*	2C	300-028	CASE (A)	1	FOR USA,CAN,SWE,FIN,AUS	
	3A	302-081	PRINTED CIRCUIT BOARD ASS'Y	1	INCLUD.14	
*	4	300-029	CASE (B)	1		
*	4	300-030	CASE (B)	1	FOR USA,CAN,SWE,FIN,AUS	
	5	300-036	TAPPING SCREW (W/FLANGE) D3X20	4		
*	6	980-642Z	CORD	1		
*	6	984-430Z	CORD	1	FOR SRI,TPE,THA,CYP,ECU	
*	6	980-644Z	CORD	1	FOR GBR (110V)	
*	6	984-431Z	CORD	1	FOR USA,CAN	
*	6A	309-169	CORD	1	FOR NZL	
*	6B	307-216	CORD	1	FOR GBR (240V)	
	7	991-167	CORD ARMOR	1		
	8	982-490	CUSHION (A)	1		
*	9	300-033	TRANSFORMER 110V – 127V	1		
*	9	300-031	TRANSFORMER 220V	1		
*	9	300-032	TRANSFORMER 230V – 240V	1		
*	9	300-038	TRANSFORMER 240V	1	FOR AUS	
*	10	302-082	FUSE HOLDER	1	FOR SUI,FIN,SWE	
*	11	302-084	FUSE HOLDER	1	(W/WIRE) FOR SUI,FIN,SWE	
*	12	302-083	FUSE	1	250V,400MA FOR SUI,FIN,SWE	
*	13		TUBE (ID7XT0.5X50)	1	FOR SUI,FIN,SWE	
*	14	991-807	FUSE (5A)	1		

OPTIONAL ACCESSORIES

	ITEM NO.	CODE NO.	DESCRIPTION	NO. USED	REMARKS	
*	601	301-832	ADAPTER (W/ENGLISH CAUTION PLATE)	1		
*	601	301-833	ADAPTER (W/GERMAN CAUTION PLATE)	1		
*	601	301-834	ADAPTER (W/FRENCH CAUTION PLATE)	1	FOR FRA	
*	601	301-835	ADAPTER (W/HOLLAND CAUTION PLATE)	1	FOR HOL	
*	601	302-079	ADAPTER (W/FINLAND CAUTION PLATE)	1	FOR FIN	
*	601	302-080	ADAPTER (W/NORWAY CAUTION PLATE)	1	FOR NOR	

* : ALTERNATIVE PARTS

Printed in Japan 1 – 95