SERVICE PARTS LIST

BULLETIN NO.
54-24-1307

SPECIFY CATALOG NO. AND SERIAL NO. WHEN ORDERING PARTS		REVISED BULLETIN	DATE
"D" HANDLE HAMMER DRILL		54-24-1306	Oct. '90
CATALOG NO. 5398	STARTING SERIAL NO. 556-85000	WIRING INSTRUCTION 58-01-0200	

EXAMPLE:
00 0 Component Parts (Small #) Are Included When Ordering The Assembly (Large #).

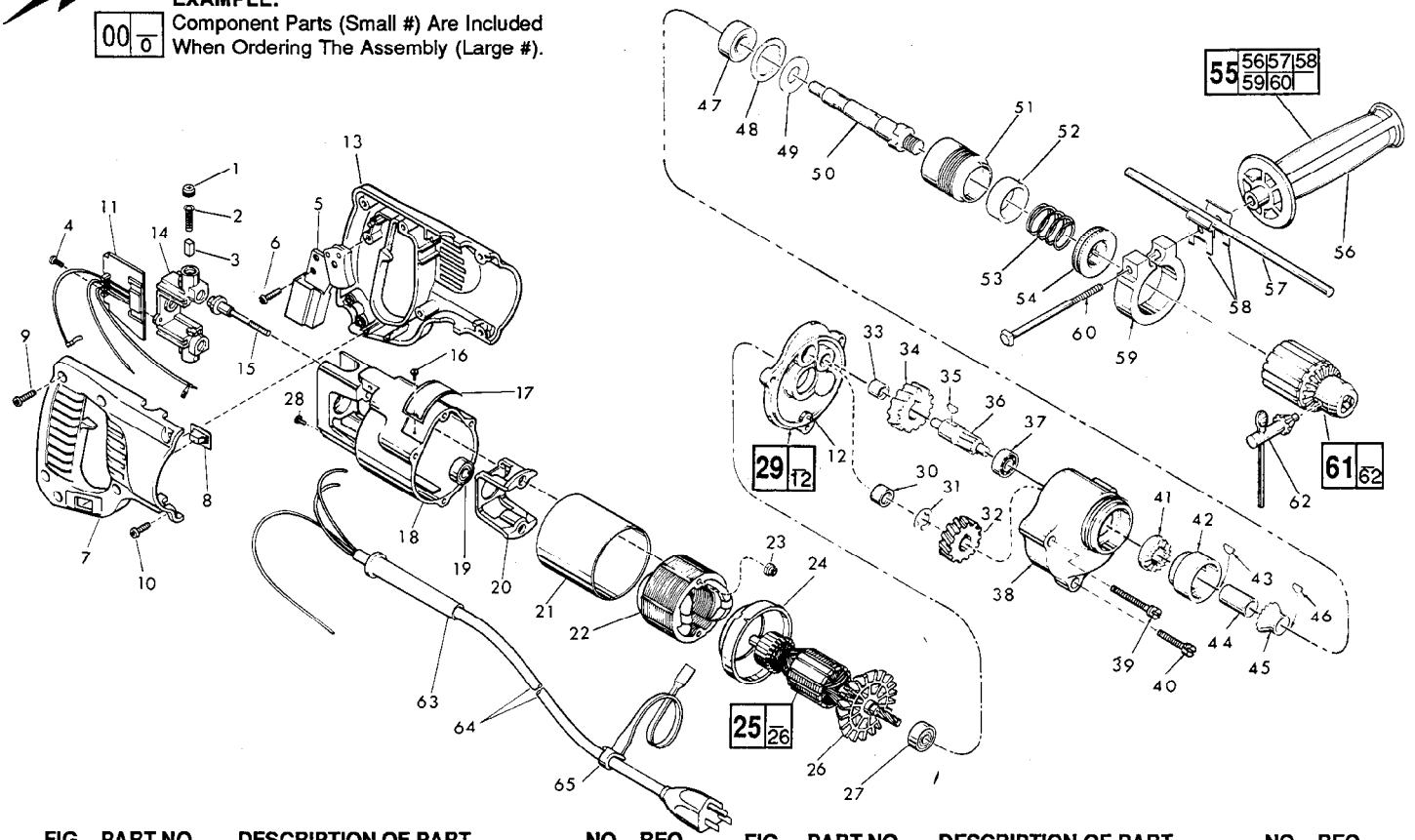

FIG.	PART NO.	DESCRIPTION OF PART	NO. REQ.
1	23-44-0190	Brush Retaining Screw	(2)
2	23-52-0160	Brush Spring	(2)
3	22-16-0275	Carbon Brush	(2)
★4	06-95-0075	6-32x3/8" Truss Hd. Taptite Screw	(2)
★5	23-66-1470	Switch	(1)
★6	06-82-7260	7-18x5/8" Torx Plastite Screw	(1)
★7	31-44-1466	R.H. Half "D" Handle	(1)
★8	31-53-0120	Plug	(1)
★9	06-82-7260	7-18x 5/8" Torx Plastite Screw	(5)
★10	06-82-5316	8-32x1/2" Torx Taptite Screw	(4)
★11	14-20-0266	Remote Electronic Assembly	(1)
12	06-65-0825	Groove Pin	(1)
★13	31-44-1471	L.H. Half "D" Handle	(1)
14	22-22-1330	Brush Holder Assembly	(1)
15	06-81-1058	Insulated Field Bolt	(2)
16	06-85-0200	6 x 1/4 Rd. Hd. Type Z Screw	(2)
★17	12-99-0555	Nameplate	(1)
18	28-50-6201	Motor Housing	(1)
19	02-04-0845	Ball Bearing	(1)
20	31-55-0030	Coil Shield	(1)
21	23-16-0456	Field Insulator	(1)
22	18-30-0100	120 Volt Field	(1)
23	06-57-2975	8-32 Flexlock Hex Nut	(2)
24	31-05-0050	Baffle	(1)
25	16-30-0225	120 Volt Armature	(1)
26	22-84-0530	Fan Assembly	(1)
27	02-04-0911	Ball Bearing	(1)
28	06-95-5150	Ground Screw	(1)
★29	28-28-0586	Diaphragm	(1)
30	02-50-2110	Needle Bearing	(1)
31	34-60-1000	Retaining Ring	(1)
32	32-75-2001	Spindle Gear	(1)
33	02-50-1640	Needle Bearing	(1)
34	32-40-1241	Intermediate Gear	(1)
35	06-42-0800	Woodruff Key	(1)

FIG.	PART NO.	DESCRIPTION OF PART	NO. REQ.
36	36-66-2701	Intermediate Shaft	(1)
37	02-04-0640	Ball Bearing	(1)
38	28-14-1915	Gear Case	(1)
39	06-82-5502	8-32 x 2-1/4" Pan Hd. Slt. Taptite Torx	(2)
40	06-82-5404	8-32 x 1-3/8" Pan Hd. Slt. Taptite Torx	(1)
41	44-84-0100	Fixed Ratchet	(1)
42	42-52-0250	Bearing Housing	(1)
43	06-42-1200	Woodruff Key	(1)
44	45-36-0890	Spacer	(1)
45	44-84-0110	Rotating Ratchet	(1)
46	06-42-0800	Woodruff Key	(1)
47	02-04-1536	Ball Bearing	(1)
48	45-88-7350	Bearing Retaining Washer	(1)
49	45-88-7365	Spring Support Washer	(1)
50	38-50-5150	Spindle	(1)
51	45-22-0405	Sleeve	(1)
52	45-88-7375	Felt Washer	(1)
53	40-50-4950	Spring	(1)
54	42-76-0200	Locking Collar	(1)
55	14-34-0250	Side Handle Assembly	(1)
56	43-62-0865	Side Handle	(1)
57	44-94-0161	Depth Gauge Rod	(1)
58	42-68-0390	Clamp	(2)
59	28-82-0150	Handle Ring	(1)
60	42-32-0160	Bolt	(1)
★61	48-66-1360	1/2" Chuck	(1)
62	48-66-3280	Chuck Key	(1)
63	44-76-0150	Cord Protector	(1)
64	22-64-0155	Cord Set	(1)
65	48-66-4040	Key Holder	(1)
	10-98-5986	Caution Label	(1)

MILWAUKEE ELECTRIC TOOL CORPORATION
13135 W. LISBON RD., BROOKFIELD, WI 53005