0 603 230 403

Stand ~~08-04-14~~
Issue 08-04-16

Fig./Abb. 1

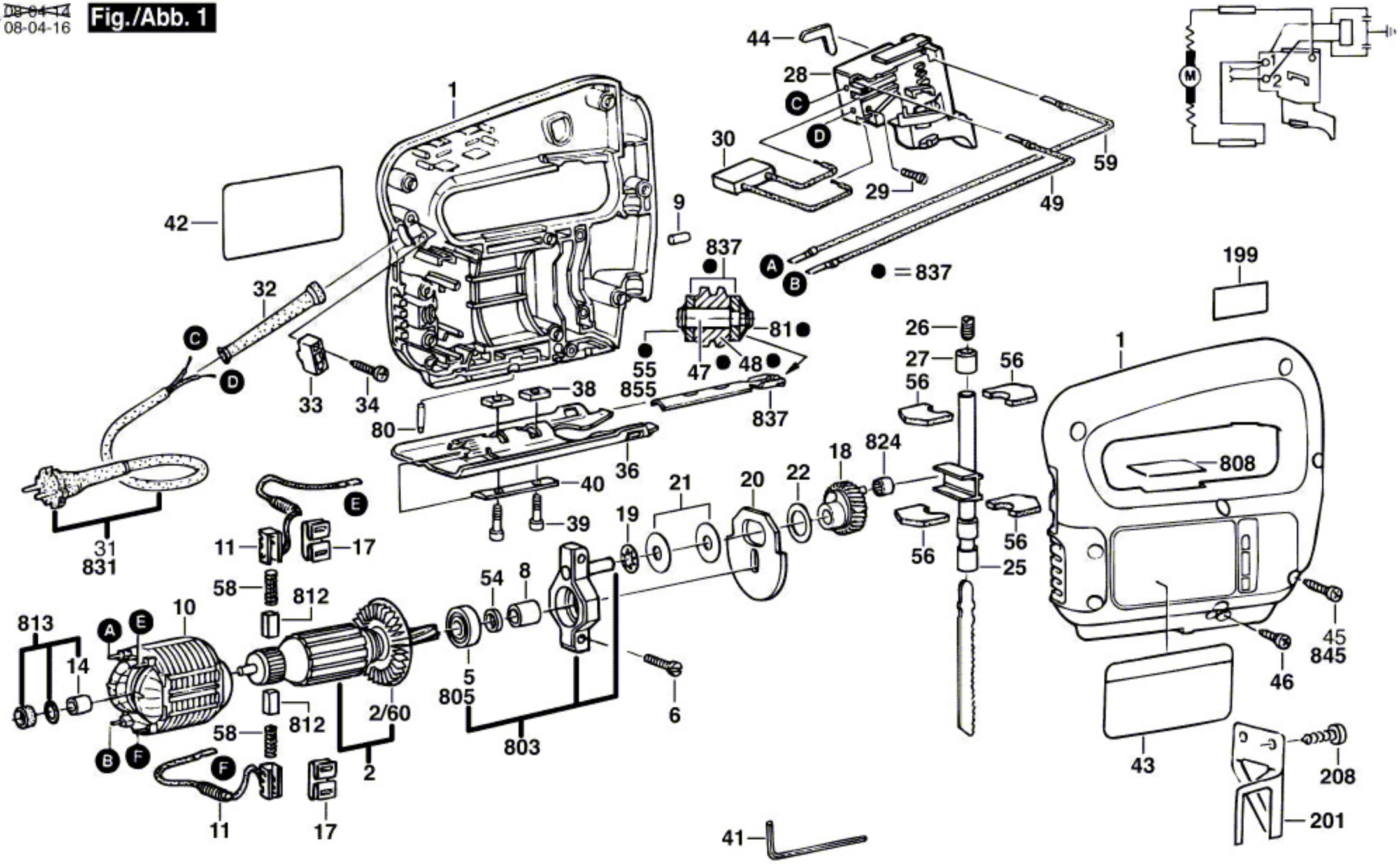

Änderungen vorbehalten
Modifications reserved
Modifications reservees
Salvo modificaciones