3 601 H59 T10

Stand ~~09-05~~
Issue 10-02-03

Fig./Abb. 1

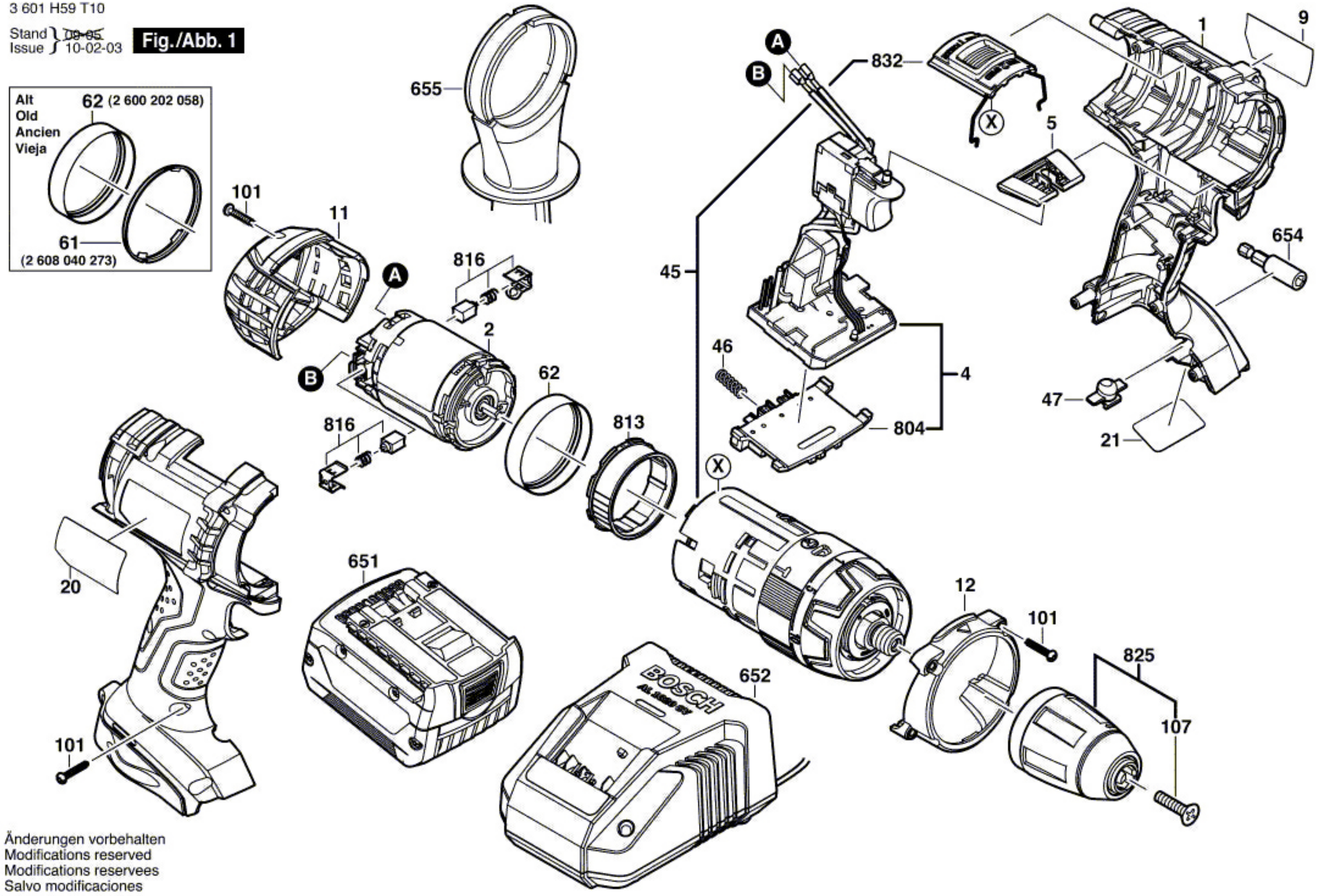

Änderungen vorbehalten
Modifications reserved
Modifications reservees
Salvo modificaciones