SERVICE PARTS LIST

BULLETIN NO.
54-05-0170

SPECIFY CATALOG NO. AND SERIAL NO. WHEN ORDERING PARTS			REVISED BULLETIN	DATE
O. E. M. DRAIN CLEANER - SPARTAN TOOL				May '98
CATALOG NO. 0566-69	STARTING SERIAL NO.	**977A**	WIRING INSTRUCTION **58-01-0031**	

EXAMPLE:
00 — 0
Component Parts (Small #) Are Included When Ordering The Assembly (Large #).

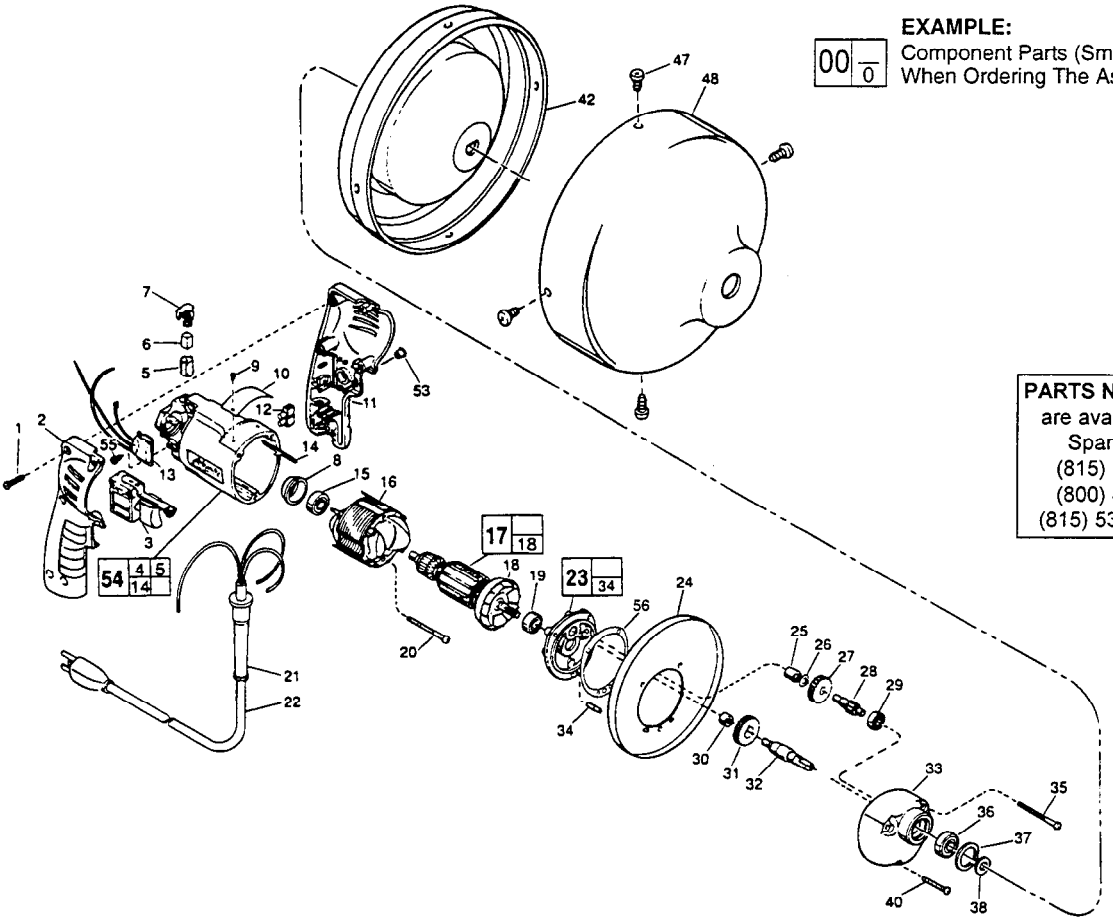

PARTS NOT SHOWN
are available from:
Spartan Tool
(815) 539-7411
(800) 435-3866
(815) 539-9786 fax

FIG.	PART NO.	DESCRIPTION OF PART	NO. REQ.
1	06-82-7284	8-16 x 3/4" Pan Hd. Slt. Plast. T-20	(6)
2	31-44-1745	Right Handle Half	(1)
3	23-66-2150	Speed Control Switch	(1)
4	23-94-6225	Ground Wire Assembly (Not Shown)	(1)
5	22-20-0830	Brush Tube	(2)
6	22-16-0275	Carbon Brush	(2)
7	23-52-1560	Brush Spring Assembly	(2)
8	22-72-0100	Bearing Cup	(1)
9	06-72-1720	Nameplate Rivet	(2)
10	12-99-0850	Service Nameplate	(1)
11	31-44-1740	Left Handle Half	(1)
12	22-56-0456	Terminal Block	(1)
13	14-20-0750	Remote Electronic Assembly	(1)
14	44-60-0530	Ground Pin	(1)
15	02-04-0645	Ball Bearing	(1)
16	18-11-0070	120 Volt Field	(1)
17	16-10-0571	120 Volt Armature	(1)
18	22-84-0760	Fan Assembly	(1)
19	02-04-0847	Ball Bearing	(1)
20	06-82-7393	7-18 x 2" Pan Hd. Slt. Plast. T-20	(2)
21	44-76-0210	Cord Protector	(1)
22	22-64-1120	Cord Set	(1)
23	14-13-0530	Diaphragm Assembly	(1)
24	45-12-0216	Shield	(1)
25	02-50-1210	Needle Bearing	(1)
26	45-88-7301	Heat Treated Washer	(1)
27	32-40-1950	Intermediate Gear	(1)
28	36-66-4370	Intermediate Pinion Shaft	(1)
29	02-04-0640	Ball Bearing	(1)
30	02-50-1620	Needle Bearing	(1)
31	32-75-3220	Spindle Gear	(1)
32	38-50-5710	Reversing Spindle	(1)
33	28-14-1825	Gear Case	(1)

FIG.	PART NO.	DESCRIPTION OF PART	NO. REQ.
34	06-65-0880	Ground Pin	(1)
35	06-82-7380	7 -18 x 1-7/8" Pan Hd. Slt. Plast.T-20	(2)
36	02-04-1020	Ball Bearing	(1)
37	34-80-1400	Retaining Ring	(1)
38	45-88-0080	Chuck Washer	(1)
40	06-82-7320	7-18 x 1-1/4" Pan Hd. Slt. Plast. T-20	(1)
42	43-11-0070	Upper Drum Section	(1)
47	06-82-8845	8-32 x 3/8" Pan Hd. Sems T-20	(4)
48	43-11-0060	Lower Drum Section	(1)
53	31-53-0111	Plug	(1)
54	14-38-0601	Motor Housing Assembly	(1)
55	06-82-7212	4-20 x 1/4" Pan Hd. Plast. T-10	(1)
56	43-44-0925	Gasket	(1)

FIG.	LUBRICATION
33	1-1/4 Oz. Type "E" Grease, No. 49-08-4122. Place near Intermediate shaft ball bearing in gear case.

FIG.	NOTE:
8	Place in motor housing before inserting armature.
15,19	Seal towards armature.
25,30	Press flush to casting surface.
36	Seal towards drum.

MILWAUKEE ELECTRIC TOOL CORPORATION
13135 W. LISBON RD., BROOKFIELD, WI 53005

Drwg. 1