SERVICE PARTS LIST

BULLETIN NO.
54-06-2925

SPECIFY CATALOG NO. AND SERIAL NO. WHEN ORDERING PARTS				REVISED BULLETIN	DATE
1/2 INCH DRILL					Jan. 2006
CATALOG NO.	**0300-20**	STARTING SERIAL NO.	**070A**	WIRING INSTRUCTION **58-01-1805**	

00 —/0

EXAMPLE:
Component Parts (Small #) Are Included When Ordering The Assembly (Large #).

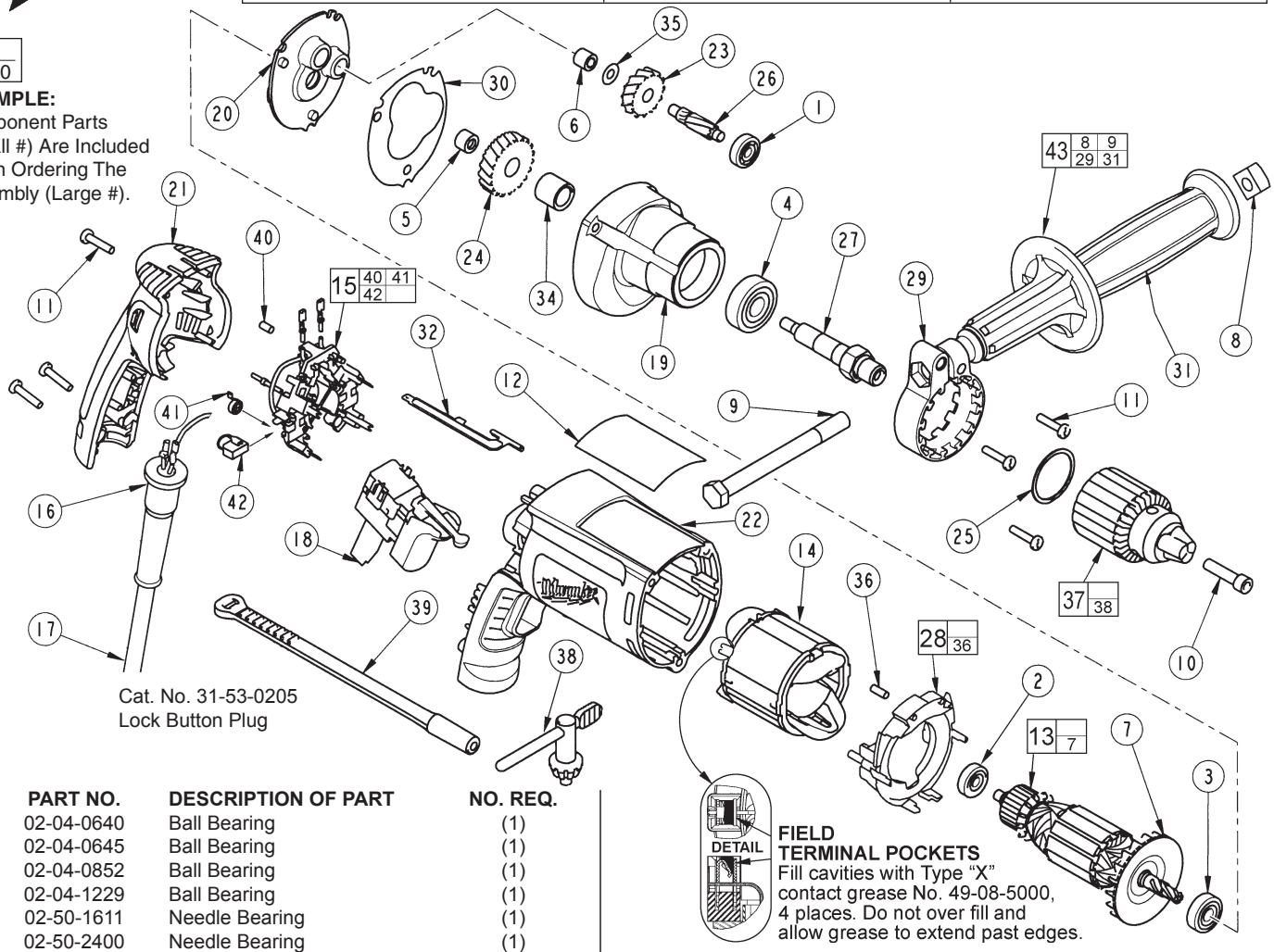

FIG.	PART NO.	DESCRIPTION OF PART	NO. REQ.
1	02-04-0640	Ball Bearing	(1)
2	02-04-0645	Ball Bearing	(1)
3	02-04-0852	Ball Bearing	(1)
4	02-04-1229	Ball Bearing	(1)
5	02-50-1611	Needle Bearing	(1)
6	02-50-2400	Needle Bearing	(1)
7	22-84-0845	Fan	(1)
8	06-54-0325	3/8-16 Square Nut	(1)
9	06-75-2850	3/8-16 x 5-1/2 Hex Cap Screw	(1)
10	06-75-3150	1/4-20 x 1 L.H. Thread Slt. Screw	(1)
11	06-82-7275	7-18 x 3/4 Slotted Plastite T-20	(6)
12	12-99-2565	Service Nameplate	(1)
13	16-10-2210	Armature	(1)
14	18-07-2206	Field	(1)
15	22-18-1210	Brush Card Assembly	(1)
16	44-76-0210	Cord Protector	(1)
17	22-64-1130	Cord Set	(1)
18	23-66-2585	Switch	(1)
19	28-14-2390	Gearcase	(1)
20	28-28-2320	Diaphragm	(1)
21	31-15-2010	Handle Halve	(1)
22	31-50-2050	Motor Housing	(1)
23	32-40-0100	Intermediate Gear	(1)
24	32-75-0100	Spindle Gear	(1)
25	34-80-2300	Retaining Ring	(1)
26	36-66-0100	Intermediate Shaft	(1)
27	38-50-5735	Spindle	(1)
28	42-14-0450	Baffle Assembly	(1)
29	42-68-0800	Side Handle Clamp	(1)
30	43-44-0985	Gasket	(1)
31	43-62-0845	Side Handle	(1)
32	44-60-1700	Ground Pin	(1)
34	45-36-1095	Spindle Spacer	(1)
35	45-88-7990	Thrust Washer	(1)
36	45-30-0030	Slug	(2)
37	48-66-1355	1/2 Chuck	(1)
38	48-66-3280	Chuck Key	(1)
39	48-66-4040	Chuck Key Holder	(1)
40	45-30-0035	Slug	(1)
41	23-52-1610	Brush Spring	(2)
42	22-18-1310	Brush Assembly	(2)
43	49-15-0265	Side Handle Assembly	(1)

LUBRICATION (Type "Y" Grease, No. 49-08-5270)

- Place 5 gm. (.02 oz.) of grease on top of the inserted intermediate ball bearing (1) and on the intermediate pinion (26).
- After inserting all gearing, place 13 gm. (.46 oz.) of grease at the armature pinion location in the gearcase (19) and fill to the top of the intermediate gear (23). Grease must contact at least 25% of the intermediate gear teeth.

Before assembly, lightly coat all press fit areas with lightweight spindle oil.

FIG.	NOTES:
4,24	Support the output ball bearing inside the gearcase before pressing off the spindle gear.
5,6	Needle bearings to be pressed flush to .010 under flush from the end which has the vendors identification.

MILWAUKEE ELECTRIC TOOL CORPORATION
13135 W. LISBON RD., BROOKFIELD, WI 53005

Drwg. 5